| MATERIAL NO. | ENG. NO. | MATERIAL NO. (TAPED) | ENG NO. (TAPED) | COLOR | MWID | OD (MAX) | "L" MAX | "B" (MAX) | ID (MIN) | "H" (NOM) |
|---|---|---|---|---|---|---|---|---|---|---|
| 191540004 | A-245X | 191540006 | A-245XT | RED | .150 (3.81) | .24 (6.1) | .98 (24.9) | .20 (5.1) | .060 (1.52) | .49 (12.4) |
| 191540015 | B-231X | 191540017 | B-231XT | BLUE | .175 (4.45) | .27 (6.9) | 1.00 (25.4) | .24 (6.1) | .080 (2.03) | |
| 191540028 | C-246X | 191540030 | C-246XT | YELLOW | .260 (6.60) | .36 (9.2) | 1.14 (29.0) | .30 (7.6) | .125 (3.17) | .43 (10.9) |

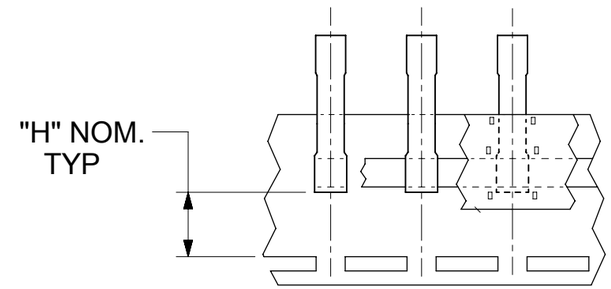


TAPE MOUNTED PARTS

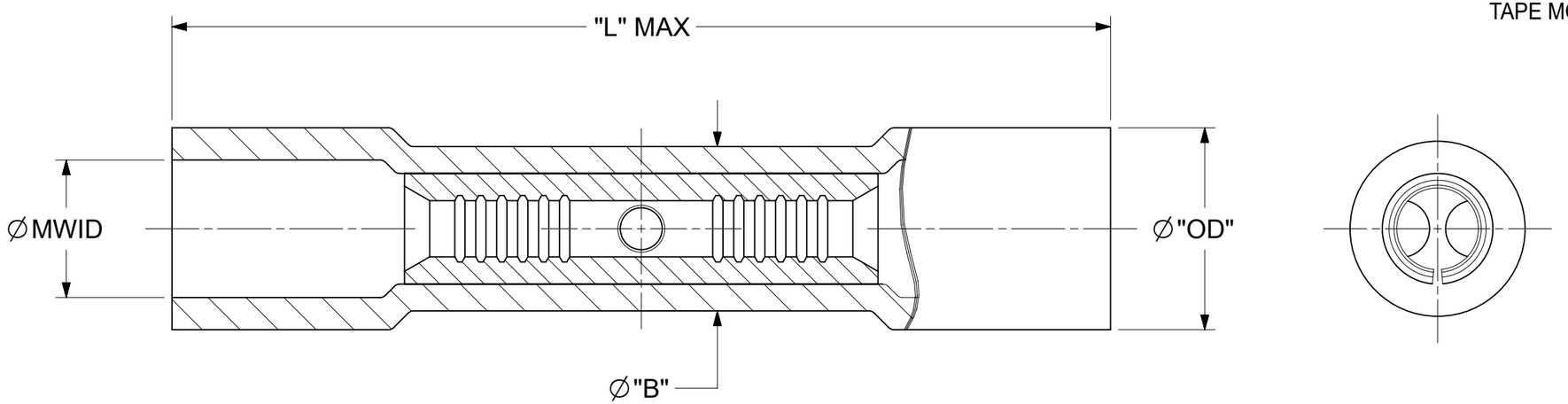


NOTES:

1. MATERIALS: PVC INSULATION OVER TIN-PLATED COPPER SPLICE.
2. COLOR: SEE CHART.
3. MWID = MAXIMUM WIRE INSULATION DIAMETER
4. PARTS ARE RoHS COMPLIANT.

THIS DRAWING CONTAINS INFORMATION THAT IS PROPRIETARY TO MOLEX ELECTRONIC TECHNOLOGIES, LLC AND SHOULD NOT BE USED WITHOUT WRITTEN PERMISSION

FUNCTIONAL SYMBOLS: EA = 0; EC = 0; EP = 0

DIVISIONAL SYMBOLS

DIMENSION UNITS: INCH/MM
SCALE: NTS

GENERAL TOLERANCES (UNLESS SPECIFIED)

| | MM | INCH |
|---|---|---|
| 4 PLACES | ± | ± |
| 3 PLACES | ± | ± 0.005 |
| 2 PLACES | ± 0.13 | ± 0.01 |
| 1 PLACE | ± 0.25 | ± |
| 0 PLACES | ± | ± |
| ANGULAR TOL | ± 0.5 ° | |

DRAFT WHERE APPLICABLE MUST REMAIN WITHIN DIMENSIONS

CURRENT REV DESC: "L MAX" DIM UPDATE: .98 WAS .97 & 1.00 WAS .98

EC NO: 713658
DRWN: DMYRICK 2022/07/08
CHK'D: THEANY 2022/07/11
APPR: THEANY 2022/07/11

INITIAL REVISION:
DRWN: ETHRODAHL 2009/07/09
APPR: JMACNEIL 2009/07/09

THIRD ANGLE PROJECTION

DRAWING: B-SIZE
SERIES: 19154

molex

BUTT SPLICE CONNECTOR, INSULKRIMP

PRODUCT CUSTOMER DRAWING

| DOCUMENT NUMBER | DOC TYPE | DOC PART | REVISION |
|---|---|---|---|
| SD-19154-006 | PSD | 001 | A1 |

| MATERIAL NUMBER | CUSTOMER | SHEET NUMBER |
|---|---|---|
| SEE CHART | GENERAL MARKET | 1 OF 1 |

| DOCUMENT STATUS | P1 | RELEASE DATE | 2022/07/11 18:35:51 |
|---|---|---|---|

FORMAT: Eng-lega-master-tb-prod-B
REVISION: E1
DATE: 2021/05/01